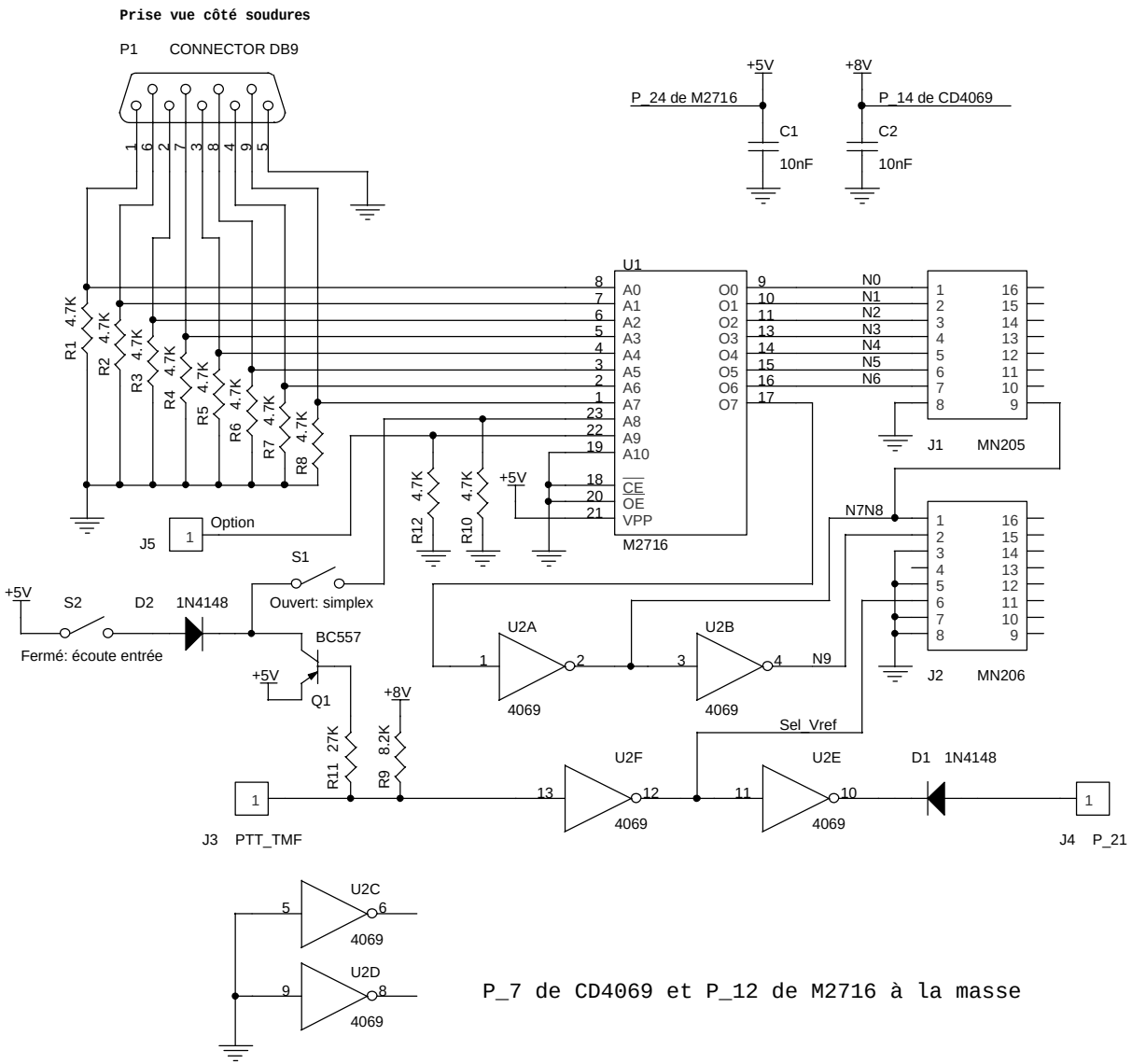

Title	**TMF144 / INTERCOM 2**	
Size A4	Document Number **F5SFU / F5DOG -- ARRAD (38)**	Rev 1.0
Date: Tuesday, November 30, 1999	Sheet 1 of 1	